HUBLOT (Wood Base)

renecazares
furnishing excellence

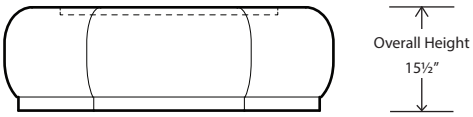

51.5" Hex Cocktail Ottoman

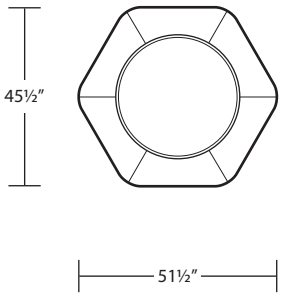

61.5" Hex Cocktail Ottoman

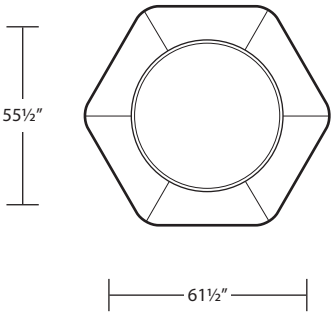

Top View Scale: 1/4" = 1 foot
Seat Depth May Vary Depenging on Back Pillow Placement
All dimensions are approximate and subject to change
01/29/2024